A Brief History of the Airgun of Meriwether Lewis and the Corps of Discovery

Philip Schreier

"Everything old is new again." Or so says the song.[1] It was one way of saying that some things in life that we hold to be bedrock foundations of our shared belief systems are considered incontrovertible, but, as we all have seen within our own brief span of life so far, nearly everything in life is subject to change without notice. History and gun collecting are no exceptions.

Recently, one of the great stories of interest to the gun-collecting community has been the history of the "Lewis & Clark air gun." Our first knowledge of it comes from the pen of Meriwether Lewis, one of the co-leaders of the expedition known as the Corps of Discovery, or as we have come to popularly know it, "The Lewis & Clark Expedition."

In the celebrated journals of the expedition, Lewis mentions the air gun on the very first page, his very first entry in what eventually totaled three years worth of notes.

> Capt. Lewis August 30, 1803
>
> "Left Pittsburgh this day at 11'ock with a party of 11 hands 7 of which are soldiers, a pilot and three young men on trial they having proposed to go with me throughout the voyage. Arrived at Bruno's Island 3 miles below halted a few minutes. went on shore and being invited on by some of the gentlemen present to try my airgun which I had purchased brought it on shore charged it and fired myself seven times fifty five yards with pretty good success; after which a Mr. Blaze Cenas being unacquainted with the management of the gun suffered her to discharge herself accedentaly the ball passed through the hat of a woman about 40 yards distanc cuting her temple about the fourth of the diameter of the ball; shee fell instantly and the blood gusing from her temple we were all in the greatest consternation supposed she was dead by [but] in a minute she revived to our enespressable satisfaction, and by examination we found the wound by no means mortal or even dangerous."[2]

We can see from this first entry that the air gun was the center of excitement and controversy from the outset of the expedition. Not much has changed in the last 200 years. At different times over just the last 50 years, no less than four institutions have claimed they hold the original air gun in their collections. As the bicentennial of the expedition drew

closer, dozens of publications illustrated and described the air gun and how it worked with convincing authority.

My own institution is not immune from the confusion/controversy surrounding the Lewis & Clark air gun. For many years after I began work at the NRA's National Firearms Museum, I regularly received phone calls from people asking if the Lewis & Clark air gun was on exhibit in our galleries. I knew we had air guns contemporary to the period, or so I thought at the time, but I was unaware of any provenance linking any of them to the great expedition of the northwest. Over the years the calls persisted to the point that I noticed a pattern beginning to develop. Finally I asked one caller just where he had heard we were the guardians of such a National Treasure. Their reply floored me. They said they had called the Smithsonian Institution and someone there told them that we had the gun.

I had vaguely recalled a ball reservoir style English-made gun in the Smithsonian as having been the Lewis & Clark air gun. I could not remember where I had heard it so I called Harry Hunter, the Smithsonian's resident firearms expert, and put the question to him. He replied that it had once been believed the Lewis & Clark air gun was of the aforementioned style but he initially told me the NRA had a single-shot air gun of substantial caliber that was carried on the Lewis & Clark expedition.

Still relatively new to the game and not knowing much better, I told National Firearms Museum (NFM) Curator Doug

Reprinted from the American Society of Arms Collectors Bulletin 93:48-57
Additional articles available at http://americansocietyofarmscollectors.org/resources/articles/

Figure 1. Air power diplomacy, commissioned by Dr. Robert Beeman ©2005. Artist Warren Lee.

Wicklund that, according to the Smithsonian, we had the Lewis & Clark air gun. We looked over the collection and found we only had one gun of the period that matched the description and settled on our own .54 caliber air gun. It is important to note that most of the guns in our collection that predate 1968 are without records. Many times, as in the case of our Mayflower wheel lock, we have relied on past issues of *American Rifleman* to establish provenance on some of our historic pieces. Without any corresponding paperwork or affidavits to prove or disprove the connection, we remained cautiously optimistic that we had the historic gun. After all, the gun was .54 caliber and in 1990 we **all** knew that the expedition was armed with .54 caliber, 1803 Harper's Ferry rifles, didn't we . . . ?

Soon air gun collectors began to hear whispered rumblings that the NFM may have the Lewis & Clark air gun. Dr. Robert Beeman and Tom Gaylord inspected our gun and determined that it was of English make and possibly made not any earlier than 1820. They remarked that it was by then common knowledge V.M.I. had an air gun donated by the late Henry Stewart who had done extensive research and determined that the air gun bearing the name "Isaiah Lukens" had been carried and used by Lewis & Clark.

Somewhat dejected and yet happy that we had never done any major press around "*our*" air gun, I again spoke to Harry Hunter and asked a question I should have asked much earlier. What made him think our air gun was the Lewis & Clark air gun? Harry replied that sometime recently (for Harry, who retired from the Smithsonian with 50 years government service, "recently" could mean from the Nixon administration) it was determined that the Lewis & Clark air gun was owned by Henry Stewart, whom Harry had thought, somewhat incorrectly, had donated the gun to the NRA. In fact Stewart did indeed donate an air gun that he believed had Lewis & Clark provenance to V.M.I. after the NRA somewhat reluctantly turned down his collection for their own National Firearms Museum.

Compounding matters somewhat was the 1957 donation of a ball reservoir type air gun to the Smithsonian by G. Charter Harrison. Harrison based his information on a passage of the journals:

> Capt. Lewis Monday June 10, 1805
>
> " . . . Shields renewed the main Spring of my air gun we have been much indebted to the ingenuity of this man on many occasions; without having served any regular apprenticeship to any trade, he makes his own tools principally and works extreemly well in either wood or metal, and in this way has been extremely serviceable to us, as well as being a good hunter and an excellent waterman."[3]

PVT Whitehouse elaborated:

> "The black Smiths fixed up the bellowses & made a main Spring to Capt. [Lewis's] air Gun, as the one belonging to it got broke."[4]

This passage alone has been the subject of much speculation over the years and yet may be one of two key passages that help identify the original air gun. Harrison, in a 1957 *Gun Report* article, theorized that the main spring repair was actually a solder job to the copper ball reservoir on the underside of the gun he donated to the Smithsonian.[5] In an article published only months earlier he had originally

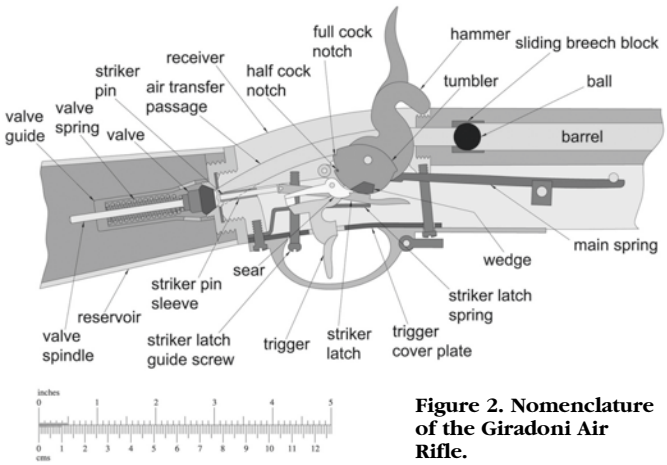

Figure 2. Nomenclature of the Giradoni Air Rifle.

Figure 3. Girardoni Air Rifle, full view, right side.

identified an Isaiah Lukens marked air gun with a replaced hammer and main spring as "The Lewis & Clark air gun."[6] Thus begins 50 years of controversy.

The Lukens air gun that Harrison illustrates in his article is a single-shot, stock-reservoir gun with an armory bright mainspring and a hammer identical to that of an 1836 U.S. martial pistol. It is his contention that these replacement parts indicate where field repairs were required that were made by blacksmith Shields on June 10, 1805.

This Lukens air gun, which has since come to be known as the Lukens DNH air gun (DNH meaning *double necked hammer*, a reference to its 1836 pistol hammer), has for some time been regarded as *the* Lewis & Clark air gun. The fifth footnote in the modern edition of the Journals of Lewis & Clark edited by Gary Moulton perpetuates this claim.

> "[5]. This weapon, which much impressed the Indians along the expedition's route, was probably manufactured by Isaiah Lukens, horologist and gunsmith of Philadelphia; it was returned to him after Lewis's death in 1809, sold at auction on Lukens's death in 1847, and discovered and identified in 1976. Probably more useful for impressing the natives than for hunting, it had a butt reservoir and was much like a Kentucky rifle in appearance. Stewart (AAGS); Chatters; Halsey; Wolff, 131–32."[7]

The most recent editor of the *Journals* is Dr. Gary E. Moulton, the first scholar to utilize all known copies of the journals to recount day by day and word for word every notation made by the members of the Corps of Discovery. These editions, numbering 13 volumes and over 1 million words, are considered to be the single most comprehensive accounting of the expedition as well as the last word on the subject. Their publication between 1983 and 2001 was the culmination of 20 years of research and writing.

The publication of the journals was popularly received by the large community of Lewis & Clark aficionados, some of whom nearly 40 years ago formed the Lewis & Clark Trail Heritage Foundation (L&CTHF). Among their members and contributors to its journal, *We Proceeded On*, is none other than a staff editor of *Gun Report* magazine, Michael Carrick, of Turner, Oregon. Carrick immediately delved into the journals, reading all 13 volumes, and made copious notes on the mention of the firearms used on the expedition. To this day, no one holds a better claim to being an expert on the firearms of the expedition than Michael. His research and database of excerpts are unequaled on the subject.

So it came somewhat as a shock to Michael when in July of 2001 a rare book dealer by the name of Ludd Trozpek approached him at the 34th annual meeting of the L&CTHF and asked him to describe the method of loading the air gun carried by Captain Lewis. Michael recounted the process of priming and loading the air gun that Henry Stewart had donated to V.M.I. Trozpek listened intently and then said that was not at all consistent to the description recorded in the diaries. Michael, knowing the journals and the firearms descriptions better than anyone, politely explained that there was no actual description of the air gun mechanism in any of the combined journals of Lewis & Clark. At that point Trozpek demurred and said that he had not meant the Lewis & Clark journals but the diary of Thomas Rodney. He then produced a most extraordinary manuscript.[8]

Thomas Rodney was the younger brother of Delaware's Caesar Rodney, a signer of the *Declaration of Independence*. In September of 1803 he was on his way West to assume a Judgeship as an appointee of President Thomas Jefferson. On September 8, 1803 Rodney's and Lewis' paths crossed in Wheeling, Virginia. Lewis made note of the meeting in his journals.

From the journals:

> Capt. Lewis September 8, 1803
>
> "8th this day wrote to the President, . . . dined with Colo. Rodney and his suit, in the evening they walked down to my boat and partook of some watermellons."[9]

Fortunately for future historians, Rodney was a bit more verbose about the encounter . . .

> Thomas Rodney September 8, 1803
>
> "Visited Captain Lewess barge. He shewed us his air gun which fired 22 times at one charge. He shewed us the mode of charging her and then loaded with 12 balls which he intended to fire one at a time; but she by some means lost the whole charge of air at the first fire. He charged her again and then she fired twice. He then

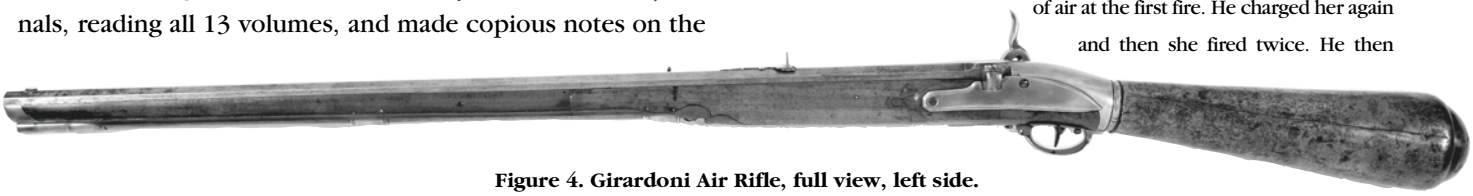

Figure 4. Girardoni Air Rifle, full view, left side.

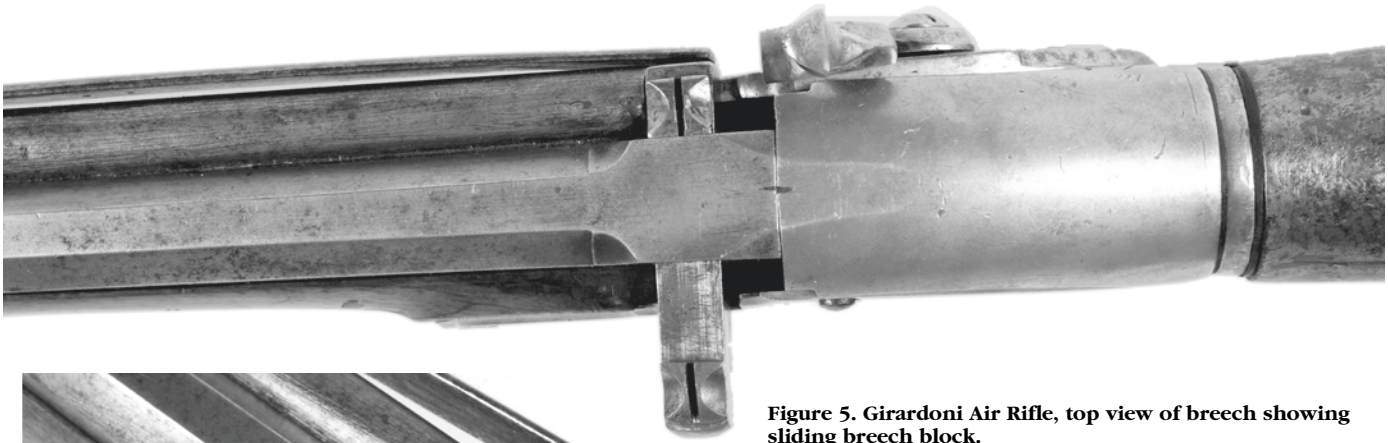

Figure 5. Girardoni Air Rifle, top view of breech showing sliding breech block.

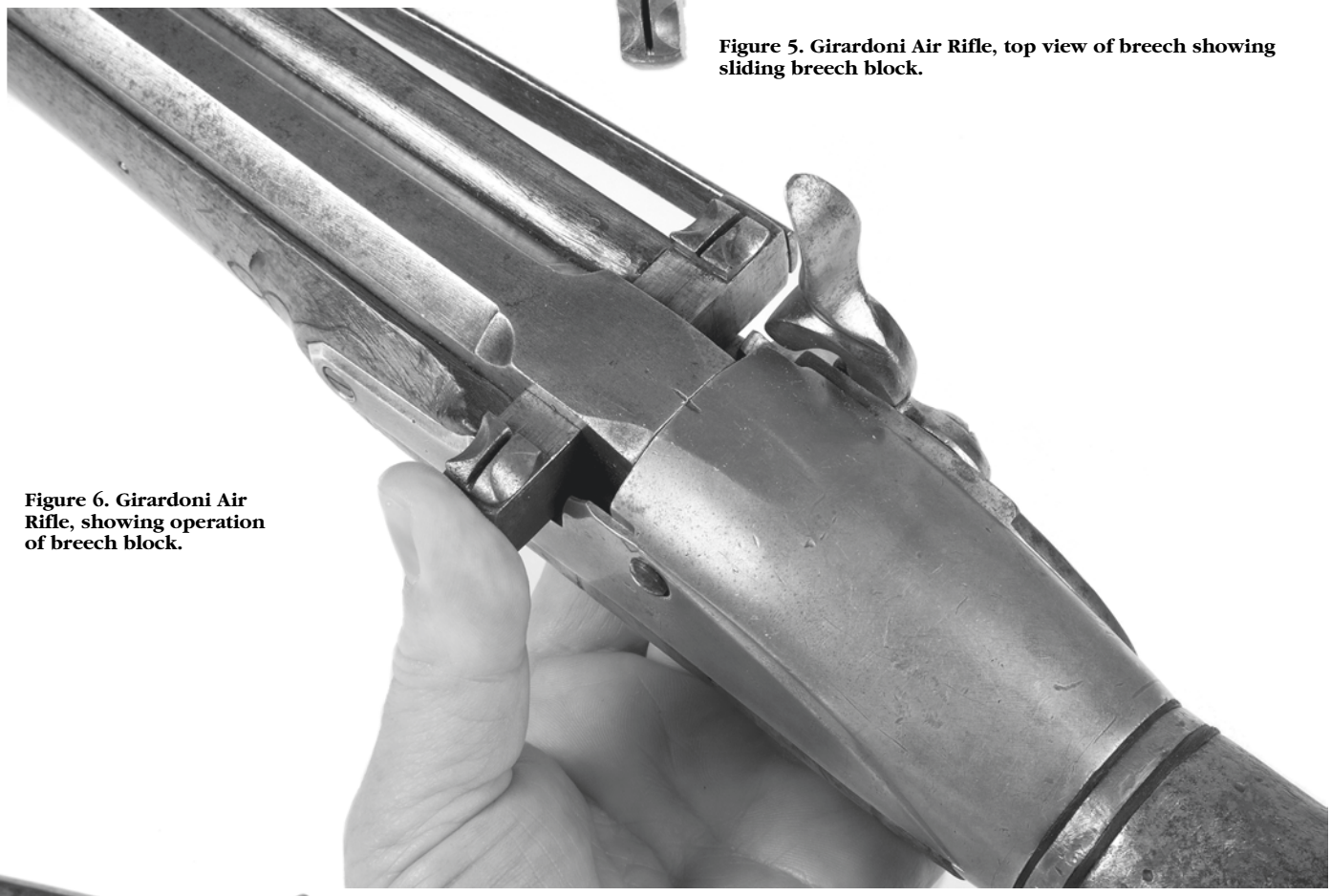

Figure 6. Girardoni Air Rifle, showing operation of breech block.

Figure 7. Girardoni Air Rifle, showing underside of rifle with detail of magazine latch.

found the cause and in some measure prevented the airs escaping, and then she fired seven times; but when in perfect order she fires 22 times in a minute. All the balls are put at once into a short side barrel and are then droped into the chamber of the gun one at a time by moving a spring; and when the triger is pulled just so much air escapes out of the air bag which forms the britch of the gun as serves for one ball. It is a curious peice of workmanship not easily discribed and therefore I omit attempting it. [. . .] Went on board Captain Lewes's barge to eat watter millons and then returned to coffee."[10]

The journals make it perfectly clear; it is now considered irrefutable proof and undeniable that Rodney and Lewis shared watermelons together!

For a period of time, that point was about all that some writers on the subject were able to agree upon.

The air gun that Rodney described was unique enough to be instantly recognizable as the type designed by C.G. Girardoni and adopted by the Austrian military in 1780 and 1799. French Field Marshal Edouard Adolphe Casimir Joseph Mortier recounted to the English writer Colonel Thornton in his 1802 book, *A Sporting Tour Through France in the Year 1802,* that his men came under the fire of an air gun in 1800 during a battle with the Austrians (possibly the Battle of Marengo, June 14,1800). Again, subsequently during the battle of Wagram (July 5–6, 1809), French Marshal Lefebre reported their use by the enemy to Napoleon who supposedly ordered instant death to anyone caught using such a barbaric weapon against his legions.[11]

Girardoni was an inventor and designer who seemed to have a fascination with repeating firearms. An 18th century Samuel Colt, he once tried to produce a 12-shot repeating flintlock. An unfortunate mistake that caused the powder magazine on the gun to blow up cost him his right hand. He quickly devoted his attentions to guns powered by air rather than powder and is now best known for his repeating air gun that was adopted by the Austrian army.[12]

The description of a Girardoni is unique to air gun mechanisms. The gun has a butt stock that also serves as an air reservoir. This small air tank holds 800 psi of air pressure delivered by a rod piston pump device that takes close to 1500 strokes to reach capacity. Remember that your car travels on tires with only 35 psi.

On the right side of the rifled barrel was attached a small tubular magazine that held twenty-two .46 caliber lead balls. Gravity fed them into a sliding breech block held taut by a straight leaf spring. By flicking your thumb and forefinger against the breech, cocking the hammer with your off hand, you could load and fire the 22 shots in under a minute, just as described by Rodney.

Air guns were nothing new in the 1800 world. Some histories date them as early as 1560. They were however complicated and expensive to produce. Until Girardoni, their use in any numbers seemed impractical. It is estimated that the Austrians produced 1500 air guns for use against Napoleon. Each soldier was equipped with a number of pre-primed air reservoirs and magazine tubes, each with 22 rounds of ammo. A battalion of men armed with repeating rifles could lay down a devastating field of fire that could darken the sky with lead.

Mike Carrick's discovery in 2001 left many questions open about the Lewis & Clark air gun. I had long questioned the provenance of the Lukens DNH/Stewart/V.M.I. gun. Mr. Stewart had addressed this very Society at the Valley Forge meeting in 1976 and described the Lukens gun as the original Lewis & Clark gun. He based his findings on a copy of Berrell & Burr's 1847 catalog of the estate of Isaiah Lukens. The catalog noted lot #95.

95. 1 large Air Gun made for and used by Messrs Lewis & Clark in their exploring expeditions. A great curiosity.[13]

Stewart made some logical conclusions. Based on Harrison's findings in 1956 that this very Lukens DNH was *the* Lewis & Clark air gun, Stewart looked for further evidence and supposedly found it in the auction catalog of 1847. The catalog listing is all he felt was needed to convince himself of its provenance to Lewis & Clark. The Lukens DNH gun passed from Stewart to V.M.I. as per his bequest and has figured prominently in the bicentennial writings and illustrations of the Corps of Discovery.

Following my own misguided assumptions on the provenance of the Lewis & Clark air gun, in 2001, I set about to examine the

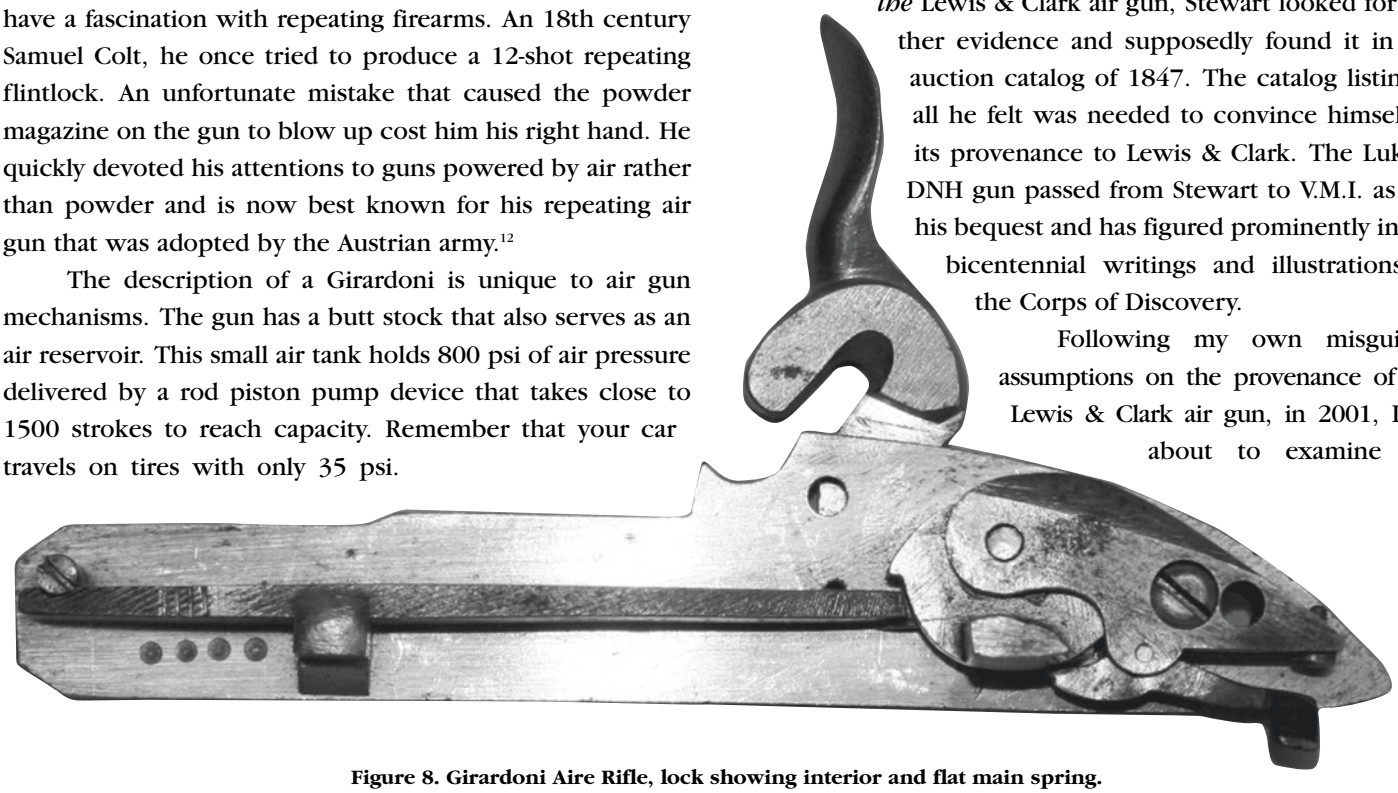

Figure 8. Girardoni Aire Rifle, lock showing interior and flat main spring.

claims of the Lukens DNH gun. My search started and ended with the 1847 auction catalog. There was nothing, absolutely nothing, in any records to establish a chain of custody from the auction to the gun Harrison introduced as the Lewis & Clark air gun in 1956. All the Lukens DNH gun had going for it was obvious postexpedition repairs to the main spring and hammer and the name Lukens was inscribed on the gun. Even if an identifying number or mark had appeared on the gun and was described by the auction catalog, it is questionable that even the catalog was correct in describing it as the Lewis & Clark air gun. Published accounts of anything are subject to verification and in the mid-nineteenth century we only have to look as far as the pages of the auspicious *New York Times*, for example, to read how General Jackson was killed and General Lee was captured at the battle of Antietam in September of 1862.

Even today, prestigious auction houses are not immune from presenting false claims as irrefutable truths. Take for example the gun that killed Jessie James. Two venerable and well-respected auction houses within the past 10 years have sold the gun that killed Jessie James at public auction with great public fanfare. The only problem is that one was a Colt and the other specimen was a Smith & Wesson. Someone has a bogus gun; the question is who to believe.

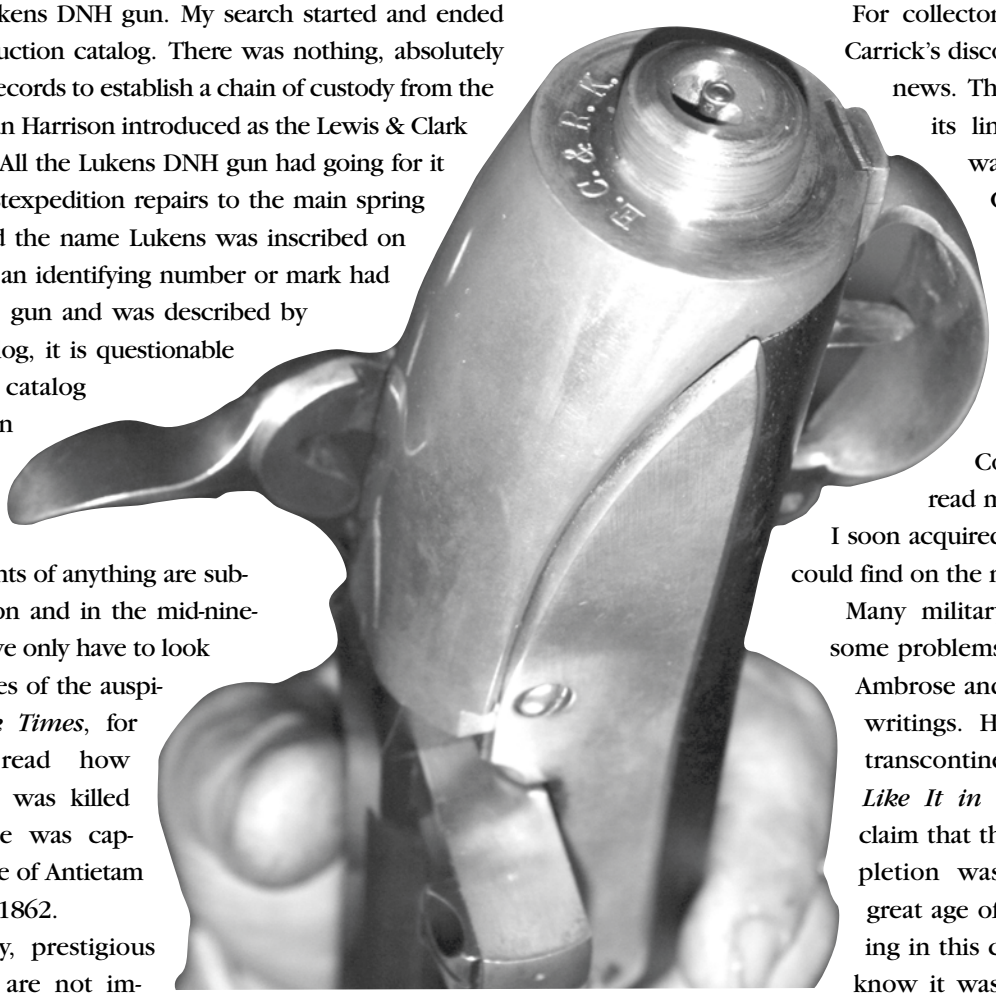

Figure 9. Girardoni Air Rifle, receiver showing striker pin retracted.

Such is the question with the Lewis & Clark air gun. Having zero provenance connecting the Lukens DNH gun with the 1847 auction or any other tying claim to the personal effects of Meriwether Lewis and, given the recent discovery of the Rodney journals, it would be irresponsible to assume that the Lukens DNH gun had anything at all to do with Lewis & Clark.

Let me be perfectly clear on one main point: I do not believe that any gun currently known can claim, with 100% certainty, to be the air gun of the Lewis & Clark expedition. We know from the journals that the gun was the personal property of Meriwether Lewis. Only government property was sold off in St. Louis following the expedition and Lewis was very particular about the difference between personal property and government stores. No known gun extant has any link to Captain Meriwether Lewis. End of story.

For collectors and historians alike, Carrick's discovery is indeed exciting news. The Girardoni system and its links to the Napoleonic war and now with the Corps of Discovery makes for fascinating conjecture. The then approaching bicentennial of the expedition and the interest in the firepower of the Corps intrigued me to read more on the subject and I soon acquired copies of everything I could find on the matter.

Many military historians have had some problems with the late Stephen Ambrose and some of his historical writings. His 2001 tome on the transcontinental railroad, *Nothing Like It in the World*, makes the claim that the railroad and its completion was responsible for the great age of industrial manufacturing in this country. We, of course, know it was the firearms industry that brought this all about. His 1992 bestseller, *Band of Brothers,* has been reviewed as an expanded version of David K. Webster's unpublished memoirs. No matter how you may feel about his methods and writings, he was a gifted historian and publicist. He had a personal obsession that intrigued him his entire life, and that was the expedition of the Corps of Discovery. For decades he read and researched it and for years he and his entire family retraced the route every holiday that they could manage. It was a lifelong interest that culminated in his 1996 book *Undaunted Courage*.

Ambrose seldom asks questions that he is unable to answer. Yet in *Undaunted Courage* he asks the same question, not once but three times: How could a relatively small expedition of soldiers and hunters travel so far, for so long, and return three years later to St. Louis having only sustained one causality, a death by natural causes?

Ambrose recounts the events of September 25, 1804.[14] Upon meeting the Sioux some Indians try to take control of the expeditions boat. Sgt. Ordway gives his account:

> SGT Ordway Tuesday September 25, 1804
>
> "a clear and pleasant morning.—all things made ready to receive the Band of the Souix nation of Indians, . . . when

30 odd was selected under the american Collours Capt. Lewis & Capt Clark went out to Speak and treat with them. Gave the 3 Chiefs 3 niew meddals & 1 american flag Some knives & other Small articles of Goods—& Gave the head chief the Black Buffalow a red coat & a cocked hat & feather &.C—likewise Some Tobacco.—[. . .]Capt. Lewis Shewed them the air Gun. Shot it Several times. then the Captains brought the 3 chiefs and one warrier they had with them. Gave the warrier a Sertifficate. then Shewed the chiefs Some curioussities. Gave them a draghm. they brought a quantity of fat Buffaloe meat and offered us the Captains accepted of Some of it & Gave them pork in return—then the Captains told them that we had a great ways to Goe & that we did not wish to be detained any longer,—they then began to act as if they were Intoxicated. with Some difficulty Capt. Clark got them to Shore. they then began to Show Some Signs of Stopping or attempting to Stop us. one of them Stayed on board the pearogue when Capt. Clark & the chiefs went out of it. the head chief the Black Buffaloe, Seized hold of the cable of the pearogue and Set down. Capt. Clark Spoke to all the party to Stand to their arms Capt. Lewis who was on board ordered every man to his arms. the large Swivel loaded immediately with 16 Musquet Ball in it the 2 other Swivels loaded well with Buck Shot, Each of them manned. Capt. Clark used moderation with them told them that we must and would go on and would go. that we were not Squaws, but warriers. the chief Sayed he had warriers too and if we were to go on they would follow us and kill and take the whole of us by degrees or that he had another party or lodge above this and that they were able to destroy us. then Capt. Clark told them that we were Sent by their great father the presidant of the U. S. and that if they misused us that he or Capt. Lewis could by writing to him have them all distroyed as it were in a moment."[15]

Ambrose writes:

> "It was a dramatic moment. Had Lewis cried "Fire!" and touched his lighted taper to the fuse of the swivel gun, the whole history of North America might have changed.
>
> . . . In short had the cannon fired, there might have been no Lewis & Clark Expedition.
>
> . . . the Sioux would have been implacable enemies of the Americans, and in possession of the biggest arsenal on the Great Plains. For some time to come, they would have had the numbers and the weapons to turn back any expedition the United States could send up the Missouri."[16]

So why didn't the Indians just kill them all in their sleep or just overwhelm them by sheer numbers—the Corps of Discovery never numbered more than 40 at any given time. Why not overwhelm them and as Ambrose says come into "*possession of the biggest arsenal on the Great Plains*?"

The answer, I personally believe, is hidden in the text of the journals. Look again at Ordway's account of the events of September 25th:

> "[. . .]all things made ready to receive the Band of the Souix nation of Indians, . . . when 30 odd was selected under the american Collours Capt. Lewis & Capt Clark went out to Speak and treat with them. Gave the 3 Chiefs 3 niew meddals & 1 american flag Some knives & other Small articles of Goods—& Gave the head chief the Black Buffalow a red coat & a cocked hat & feather &.C—likewise Some Tobacco.—"[17]

This is a description recounted numerous times throughout the journals. The Captains meet a new group of Indians and provide a formal dress parade to greet them: uniforms brushed and clean, chapeau du pays at the familiar jaunty tilt, and the stars and stripes flying overhead. They present the Chiefs with gifts; he makes a speech welcoming them into the family of the great white father in Washington. Then, according to Ordway . . .

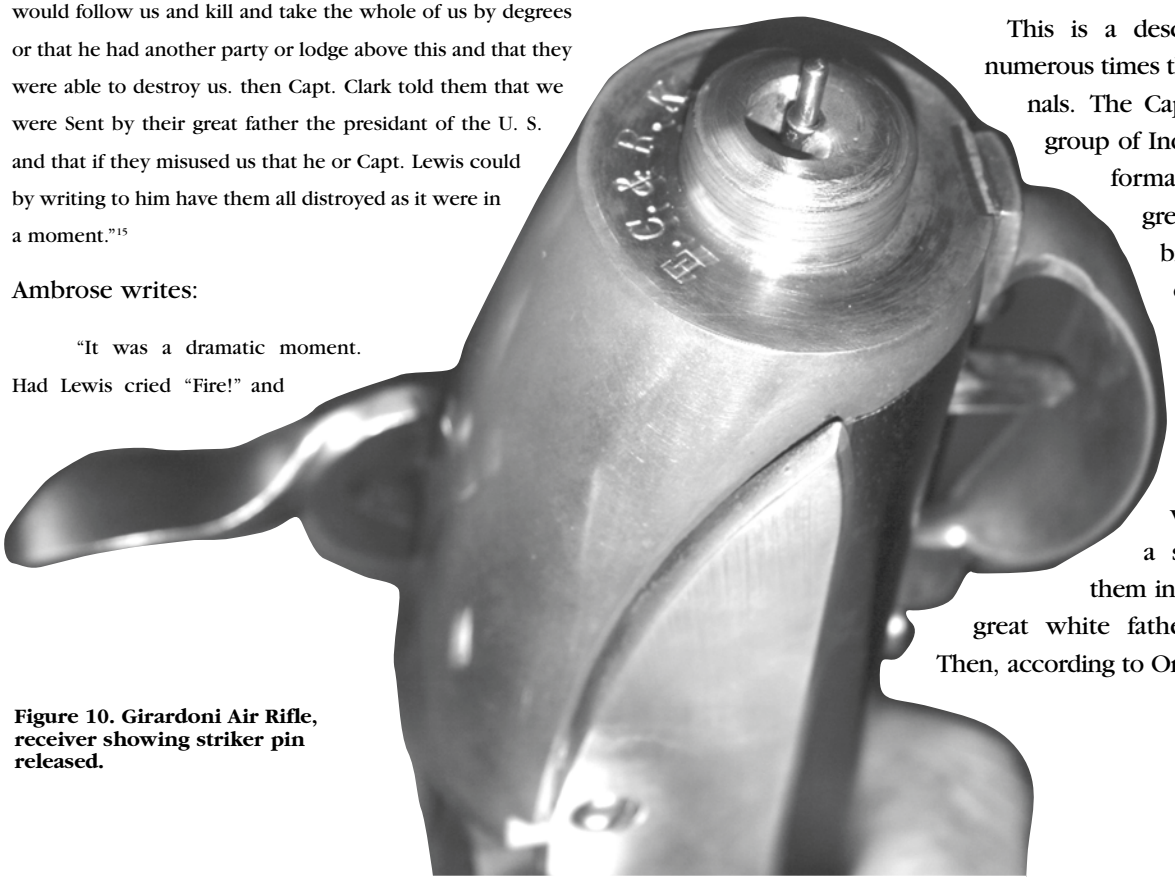

Figure 10. Girardoni Air Rifle, receiver showing striker pin released.

Figure 11. Girardoni Air Rifle, valve and brass valve springs, original (left) and reproduction (right).

> " . . . Capt. Lewis Shewed them the air Gun. Shot it Several times."[18]

According to Michael Carrick's research, there are 39 such passages in the journals where Lewis runs through this exact routine. Each nearly always ends with the same observation. On writing about the air gun the journals record the reactions as having *"astonished the nativs,"* and *"the air gun asttonished them verry much,"* and my personal favorite:

> Capt. Lewis August 17, 1805
>
> " . . . we communicated to them fully the objects which had brought us into this distant part of the country, in which we took care to make them a conspicuous object of our own good wishes and the care of our government. we made them sensible of their dependance on the will of our government for every species of merchandize as well for their defence & comfort; and apprized them of the strength of our government and it's friendly dispositions towards them. we also gave them as a reason why we wished to petrate the country as far as the ocean to the west of them was to examine and find out a more direct way to bring merchandize to them. that as no trade could be carryed on with them before our return to our homes that it was mutually advantageous to them as well as to ourselves that they should render us such aids as they had it in their power to furnish in order to haisten our voyage and of course our return home. that such were their horses to transport our baggage without which we could not subsist, and that a pilot to conduct us through the mountains was also necessary if we could not decend the river by water. but that we did not ask either their horses or their services without giving a satisfactory compensation in return.—They appeared well pleased with what had been said. the chief thanked us for friendship towards himself and nation & declared his wish to serve us in every rispect; . . . we next enquired who were chiefs among them . . . . we gave him a medal of the small size with the likeness of Mr. Jefferson the President of the U' States in releif on

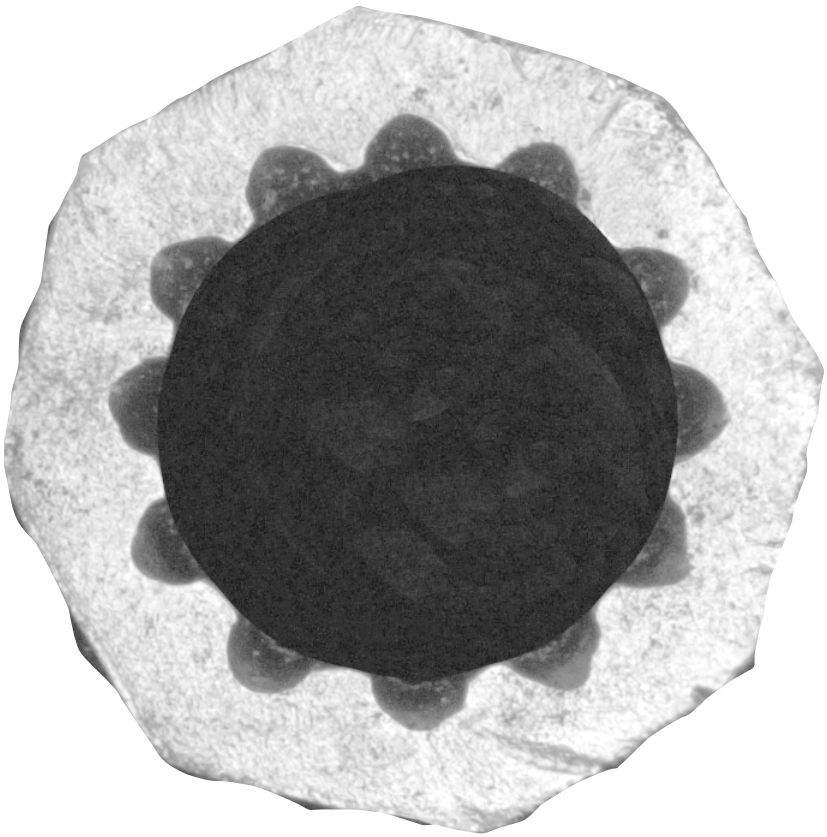

Figure 12. Girardoni Air Rifle, close up of rifling at muzzle.

Figure 13. Pouches and air pump for Girardoni Air Rifle, reproduction.

> one side and clasp hands with a pipe and tomahawk on the other, to the other Chiefs we gave each a small medal which were struck in the Presidency of George Washing Esqr . . . . every article about us appeared to excite astonishment in ther minds; the appearance of the men, their arms, the canoes, our manner of working them, the back man york and the segacity of my dog were equally objects of admiration. I also shot my air-gun which was so perfectly incomprehensible that they immediately denominated it the great medicine. the idea which the indians mean to convey by this appellation is something that eminates from or acts immediately by the influence or power of the great sperit; or that in which the power of god is manifest by it's incomprehensible power of action."[19]

When meeting new groups of Indians, Lewis had a routine worked out. Parade the men in uniform, fly the flag, give a speech welcoming them into the United States, show them gifts and firepower, and most importantly, show the air gun because it amazed them to great wonderment. It was Lewis' parlor trick, his slight of hand to intimidate the Indians into thinking that the explorers were even more powerful than they seemed. The Indians, whom Lewis never exposed the full contents of his keel boat or any of his supplies, never knew if the expedition had 1 or 40 air guns. To think that 30 or so explorers could lay down 22 shots with great accuracy within seconds must have impressed the Indians into a state of submissiveness and cooperation. Lewis traveled the West with an ace up his sleeve in the form of the repeating air gun. This type of intimidation could never have been possible with one single-shot air gun of the Lukens DNH design. Only the Girardoni is capable of obtaining the results that Lewis got from the Indians. Lewis must have planned this operation from the beginning; the results speak for themselves. The party was never molested in force and all but one man returned to St. Louis in 1806.

So to answer Ambrose's question, Lewis & Clark survived the trip, explored the West, added to the map of the U.S. twice her previous territory, and made friends of the Indians by following the golden rule of diplomacy . . . peace through superior firepower! (Or at least the perceived impression of superiority). The End (Maybe . . .)

Post Script: My obsession with the Lewis & Clark air gun caught the attention of two friends from Chambersburg, Pennsylvania, Rick Keller and Ernie Cowan, who became instantly taken by the Girardoni system. They contacted another friend of mine, Dr. Robert Beeman of California, and sought to borrow his Austrian military Girardoni from his collection for study. They were eventually given permission to take the gun apart to enable them to examine and copy the mechanism for a reproduction they planned to craft from hand. Upon examination of the inner workings of the gun, they discovered that the main spring was unlike any previously encountered, it was a flat main spring, not a "V" spring, as we are most familiar with. Upon closer examination, it was discovered that the spring was not original to the gun. It was a crudely shaped spring that bore traces of crosshatch marks that indicated that it had been made from a farrier's file!!!

Could John Shields, the expedition's farrier and blacksmith, have made this field repair on June 10, 1805 as described in the journals?

ACKNOWLEDGEMENT

The author also thanks the following for their encouragement, assistance, and generosity in making this presentation and display possible: Dr. and Mrs. Robert D. Beeman, Michael Carrick, Ernest Cowan, Jeffery H. Johnston, Richard H. Keller, and J. William LaRue.

Figures 1, 2, 11, 12, 13, and 14 courtesey of Dr. Robert Beeman. ©2005, used with permission. See also www.beemans.net.

REFERENCES

Ambrose, Stephen E. *Undaunted Courage—Meriwether Lewis, Thomas Jefferson, and the Opening of the American West.* (Simon & Schuster, New York, New York, 1996).

Beeman, Dr. Robert D. *New Evidence Points to the Lewis*

Figure 14. Girardoni Air Rifle, replaced main spring (bottom) and period ferrier's file (top) Matches description of repair effected by John Sheilds.

& Clark Air Rifle—an "Assault Rifle" 1803. (Unpublished manuscript. As found on www.beemans.net, update of March 13, 2006).

Carrick, Michael. *Meriwether Lewis's Air Gun.* (From *We Proceeded On*, Journal of the Lewis & Clark Heritage Trail Foundation, November 2002.), Pg 15.

Carrick, Michael. *Meriwether Lewis' Repeating Air Gun.* (*Gun Report,* January 2003), Pg 28–36.

Harrison, G. Charter, Jr. *The Lewis & Clark Air Gun* (*Gun Report*, May 1956), Pg 6.

Harrison, G. Charter, Jr. *Re-Inquiry Into the Lewis & Clark Air Gun* (*Gun Report*, November 1957), Pg 14.

Keller, Richard H. *The Repeating Air Rifle of the Lewis & Clark Expedition.* (Unpublished manuscript, April 2006).

Moulton, Gary E., ed., *The Journals of the Lewis & Clark Expedition,* 13 vols. (Lincoln: University of Nebraska Press, 1983–2001).

Rodney, Thomas. *Book of Accounts of Thomas Rodney Commencing at Dover in the State of Delaware, August 1803.* (Manuscript Division, Library of Congress, Washington, D.C.).

Smith, W. H. B. *Smith's Standard Encyclopedia of Gas, Air, & Spring Guns of the World* (Castle Books, New York, 1957).

Stewart, Henry M. *The American Air Gun School of 1800–1830.* (Bulletin of the American Society of Arms Collectors, #35).

FOOTNOTES

1. *All That Jazz,* "Everything Old Is New Again" Written by Peter Allen and Carole Bayer Sager. Performed by Peter Allen, Irving Music, Inc./Woolnough Music, Inc. (BMI)/New York Times Music Corp. (BMI), 1979.

2. Moulton, Gary E., ed., *The Journals of the Lewis & Clark Expedition. August 30, 1803.* 13 Vols. (Lincoln, NE, University of Nebraska Press, 1983–2001).

3. Moulton, *June 10, 1805.*

4. Ibid.

5. Harrison, G. Charter Jr. *Re-Inquiry Into the Lewis & Clark Air Gun, The Gun Report.* November 1957.

6. Harrison, G. Charter Jr. *The Lewis & Clark Air Gun, The Gun Report.* May 1956.

7. Moulton, *footnote #5 August 30, 1803.*

8. Carrick, Michael. *Meriwether Lewis's Air Gun. We Proceeded On*, *Journal of the Lewis & Clark Heritage Trail Foundation,* November 2002.

9. Moulton, *September 8, 1803.*

10. Rodney, Thomas. *Book of Accounts of Thomas Rodney Commencing at Dover in the State of Delaware, August 1803.* Manuscript Division, Library of Congress, Washington, D.C.

11. Smith, W.H.B. *Smith's Standard Encyclopedia of Gas, Air, & Spring Guns of the World.* Pg. 25. Castle Books, New York, 1957.

12. Ibid, *Pg. 28.*

13. Stewart, Henry M. *The American Air Gun School of 1800–1830.* Bulletin of the American Society of Arms Collectors, #35.

14. Ambrose, Stephen E. *Undaunted Courage—Meriwether Lewis, Thomas Jefferson, and the Opening of the American West.* Pg. 170. Simon & Schuster, New York, New York, 1996.

15. Moulton, *September 25, 1804.*

16. Ambrose, *Pg. 170.*

17. Moulton, *September 25, 1804.*

18. Ibid.

19. Ibid, *August 17, 1805.*